SURE KEY EXAMINATIONS BOARD

PRIMARY LEAVING MOCK EXAMINATION

2022

INTEGRATED SCIENCE

Time Allowed: 2 hours 15 minutes

Index No.						Personal No.		

Candidate's Name: ....

Candidate's Signature: .....

School Name: ....

District Name:.....

Read the following instructions carefully:

1. Do not forget to write your **school** or **district name** on this paper.
2. This paper has two sections: **A** and **B**. Section **A** has **40** questions and Section **B** has **15** questions. The paper has **16 printed pages** altogether.
3. Answer **all** questions. **All** the working for both sections **A** and **B** must be shown in the spaces provided.
4. **All** working must be done using a **blue** or **black** ball point pen or ink. Any work done n pencil will **not** be marked.
5. Unnecessary **changes** in your work and handwriting that cannot easily be read may lead to loss of marks.
6. Do not fill anything in the table indicated: **"For Examiners' Use only"** and boxes inside the question paper.

FOR EXAMINERS´ USE ONLY		
Qn.No.	**MARKS**	**EXR´S NO.**
1 - 10		
11 - 20		
21 - 30		
31 - 40		
41 - 43		
44 - 46		
47 - 49		
50 - 52		
53 - 55		
TOTAL		

SECTION A: 40 MARKS

Questions **1** to **40** carry **one mark** each

1. Name the element of weather that helps crop farmers to carryout winnowing.

   .....

2. Mention any **one** fungal disease that affects the human skin.

   .....

3. How is culling important in poultry management?

   .....

The diagram below is of **a fishing rod**. Study and use it to answer questions **4** and **5**.

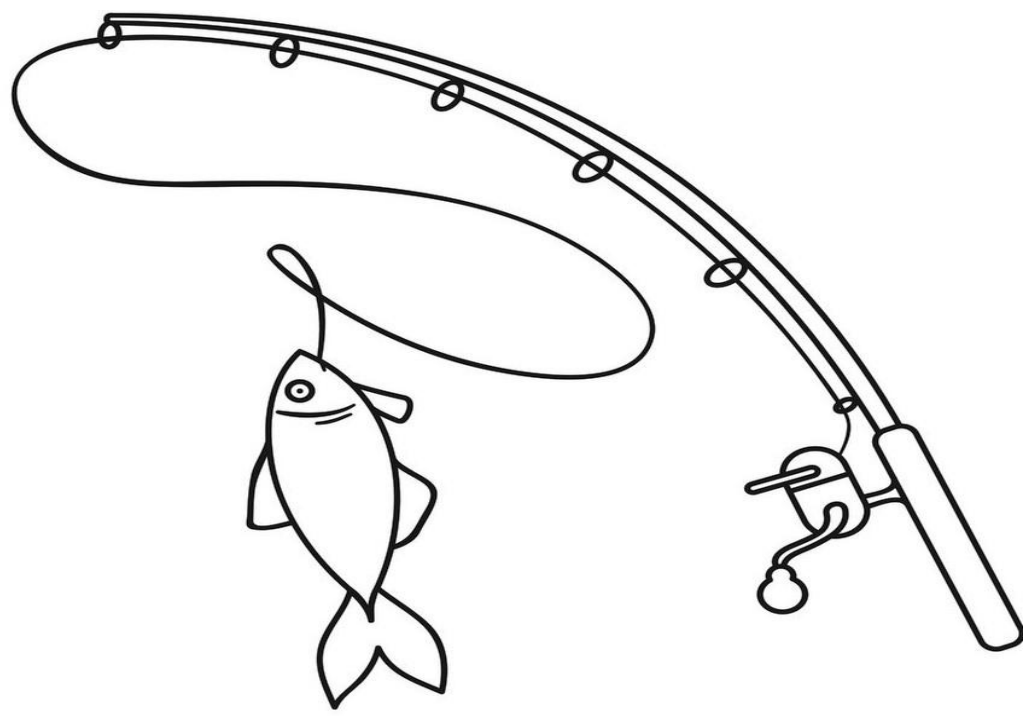

4. Name the class of levers to which the fishing rod belongs.

   .....

5. On the diagram above, label the load.

6. Why is it not advisable to keep potted plants in a room where people live?

   .....

7. Give any **one** disorder of the human digestive system.

.....

8. Why is the filament of an electric bulb coiled?

.....

9. In which part of an onion plant is food stored?

.....

10. State any way in which the fish benefits from its slippery body.

.....

11. How is the function of the cotyledon in the maize grain different from that in a bean seed?

.....

.....

12. Give any **one** way in school children benefit from a school garden.

.....

13. What is the importance of giving a person who has drunk paraffin fluids like milk to drink?

.....

14. State the best way of preventing childhood immunisable diseases.

.....

The diagram below shows **a human ear** .Study and use it to answer questions **15** and **16**.

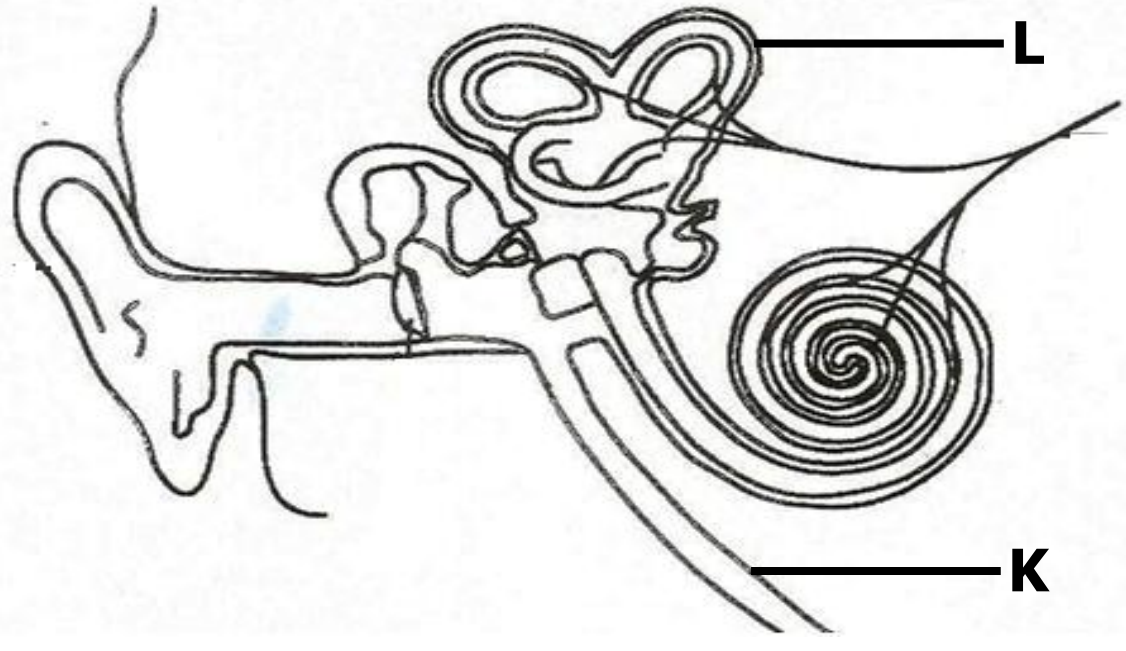

15. Name the part marked **K**.

.....

16. State the function of the part marked **L** on the human ear above.

.....

17. Which disease vector spreads river blindness to people?

.....

18. How does painting help to prevent a metallic object from rusting?

.....

19. State any **one** way of increasing the volume of blood in the human body.

.....

20. In which one way are air sacs (alveoli) able to carry out gaseous exchange?

.....

21. Why is it more difficult to push a wheelbarrow uphill than downhill?

.....

.....

22. Apart from making alcohol, state any **one** other way in which distillation is useful to people.

.....

23. State any **one** factor to consider before sorting clothes for washing.

.....

24. How does a candle manufacturer benefit from bee keeping?

.....

25. Apart from preventing teenage pregnancy, give **one** other reason why school girls are advised to abstain from sex.

.....

26. State the importance of moulting to an insect.

.....

27. What is the function of the cortex in the kidney?

.....

28. How does buoyancy(upthrust) force affect the weight of objects in water?

.....

.....

29. How is a chameleon important to human beings?

.....

30. Give any **one** breed of goats kept for milk production.

.....

The diagram below shows a condition during the flow of electricity along electric wires. Study and use it to answer questions **31** and **32**.

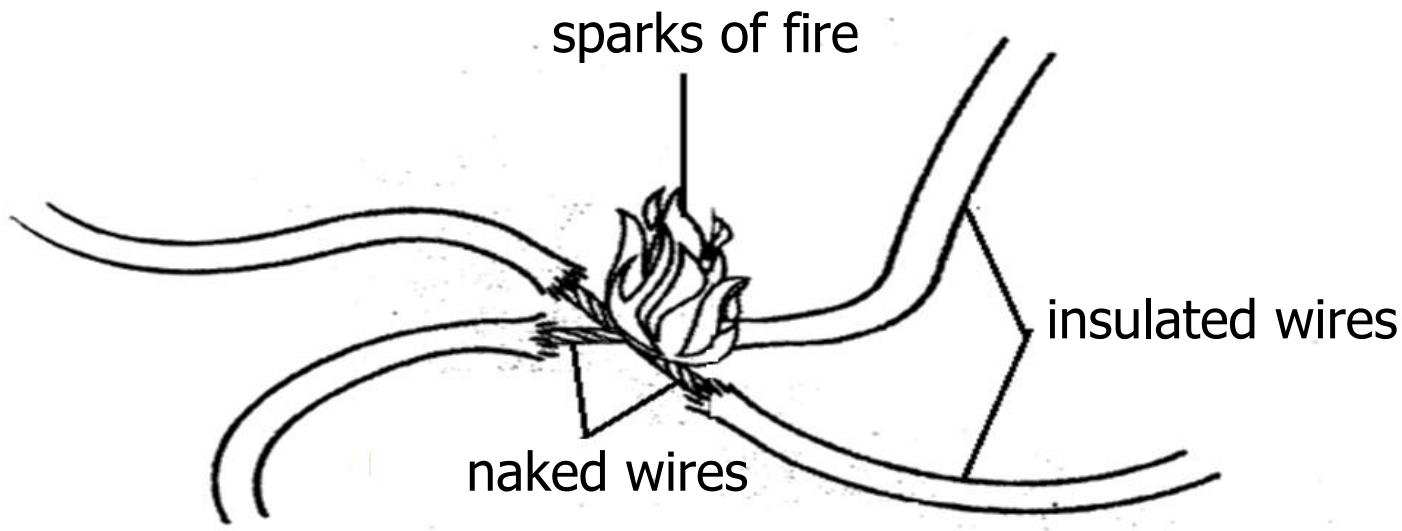

31. Identify the electrical condition shown above.

.....

32. Write any **one** cause of the above condition during flow of electric current

.....

33. Why is it not advisable to stop petrol fire using water?

.....

34. State any **one** way in which colostrum is important to a newly born calf.

.....

35. What would you do to the garden where planted seeds failed to germinate?

.....

36. Why does a clay-made charcoal stove use less charcoal than a metallic one?

.....

37. State any **one** habit that helps to promote oral health.

.....

38. What is the importance of a chimney on a kitchen?

.....

39. State any **one** reason why clay soil is used for making ceramics.

.....

40. In which part of a lens camera are images formed?

.....

SECTION B: 60 MARKS

Questions **41** to **55** carry four marks each.

41. (a) Name the part on a house that performs the following functions,

(i) Lets fresh air into the house .....

(ii) Lets warm air out of the house .....

(b) By what process does heat travel through a saucepan placed on a gas cooker?

.....

(c) State any **one** way in which insulators of heat are useful to people.

.....

42. The diagram below shows a type of bee hive. Study and use it to answer the questions that follow.

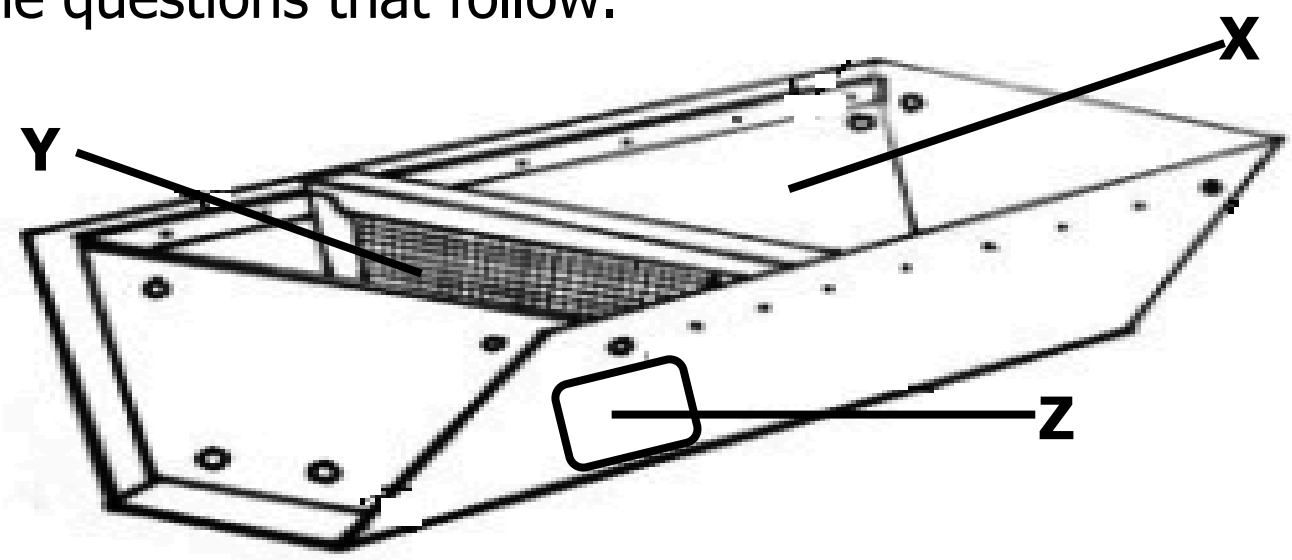

(a) Name the parts marked **X** and **Z.**

(i) **X** .....

(ii) **Z** .....

(b) Sate any **one** function of the part marked **Y** on the beehive above.

.....

(c) Identify the type of beehive shown above.

.....

43. The table below shows parts of a flush toilet with their functions in the wrong order.

Part	**Function of part**
Toilet seat	Stores faeces and urine
Bowl	Stores water for flushing the toilet
Cistern tank	For the user to sit on when defecating
Septic tank	For depositing faeces and urine

Match the parts to their function by re-writing the correct order.

a) Toilet seat.....

b) Bowl.....

c) Cistern tank .....

d) Septic tank.....

44. A Primary Five pupil mixed sugar with water and stirred.

(a) State what happened to sugar.

.....

(b) Why did sugar behave as stated in (a0 above?

.....

(c) Identify the name given to the following substances in the above experiment.

(i) Sugar .....

(ii) Water .....

45. (a) Name any **two** examples of wedges.

(i) .....

(ii) .....

(b) Give any **two** ways in which a crop farmer uses wedges.

(i) .....

(ii) .....

46. The list below shows food stuffs that belong to different classes of food. Use it to answer the questions that follow.

Orange, Honey, Iodised salt, cassava

(a) In which class of food does iodised salt belong?

.....

(b) Name any **one** class of food which is not represented in the above list.

.....

(c) identify any **one** foodstuff you would advise a brick maker to eat.

.....

(d) How are oranges useful to human health?

.....

47. The diagram below shows **blood vessels in the human circulatory system**. Study and use it to answer the questions that follow.

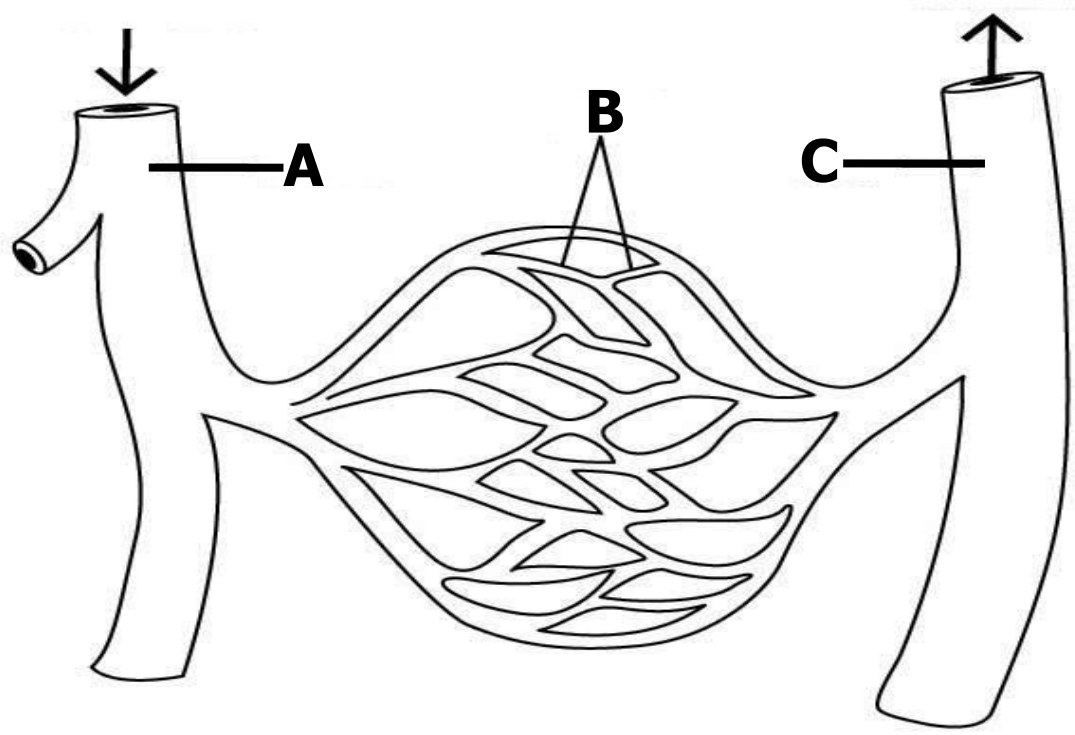

(a) Name the blood vessels marked **A** and **B**.

(i) **A** .....

(ii) **B** .....

(b) State any **one** structural difference between blood vessel **A** and blood vessel **C**.

.....

.....

(c) Give any **one** function of blood vessel **B** during blood circulation.

.....

48. (a) What germ causes gonorrhea in human beings?

.....

(b) Give any **two** signs of gonorrhea.

(i) .....

(ii) .....

(c) State any **one** way of preventing gonorrhea in human beings.

.....

49. (a) Give any **two** ways in which drug dependence can affect an individual.

(i) .....

(ii) .....

(c) State **two** ways in which an individual can avoid drug dependence.

(i) .....

(ii) .....

50. (a) Mention any **two** chemicals used to treat water.

(i) .....

(ii) .....

(b) Apart from using chemicals, state any **one** other method used to make water safe for drinking.

.....

(b) Why is water obtained by filtration not good for drinking?

.....

51. (a) Apart from compost manure, mention any **two** other examples of natural fertilizers.

(i) .....

(ii) .....

(b) Why should water be sprinkled on a compost pit or heap?

.....

(c) State any **one** advantage of using natural fertilizers over artificial fertilizers.

.....

.....

52. The diagram below shows a device used in the production of electricity. Study carefully and use it to answer the questions that follow.

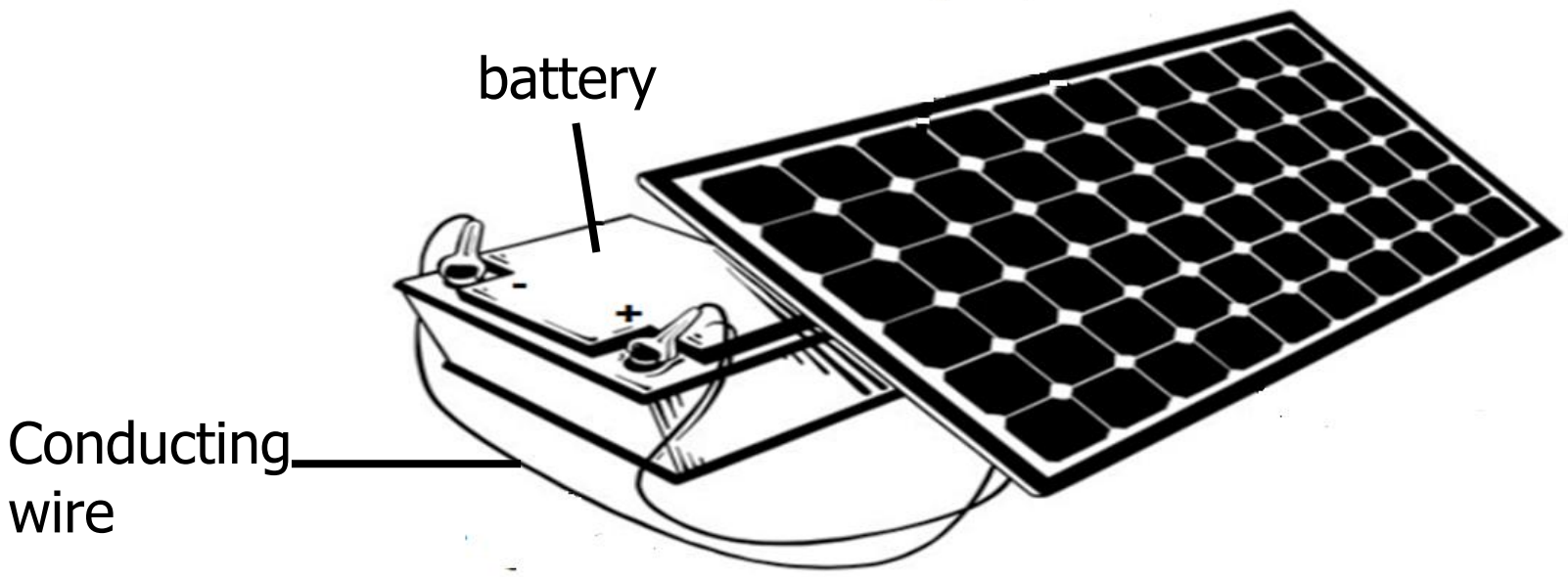

(a) Identify the device shown in the diagram above.

.....

(b) Give any **one** reason why the above device is usually,

(i) placed on top of a house roof.

.....

(i) painted black on the surface.

.....

(c) Name any **one** electrical appliance that uses electricity produced by the above device.

.....

53. (a) Give any **one** reason why a passion fruit plant climbs others.

.....

(c) Apart from a passion fruit plant, name any **one** other plant that climbs others.

.....

(b) State any **two** ways how plants with weak stems climbs others.

(i) .....

(ii) .....

54. The table below shows groups of birds, type of food eaten and nature of their beaks. Study and complete it correctly.

Group	Type of food	Nature of beak
Climbing birds	.....	Strong pointed and chisel shaped beak.
.....	Flesh	Strong sharp hooked beak
Wading birds	.....	Long thin beak
Swimming birds	Fries, toads, frogs	....

55. (a) Name the fungus used in the following,

(i) brewing of alcohol

.....

(ii) making of antibiotics

.....

(b) State any **two** ways in which fungi are harmful to people.

(ii) .....

(iii) .....

END